QUANTIFI PHOTONICS™

Tray

PASSIVE COMPONENT ORGANIZER

PXIE USER MANUAL

quantifiphotonics.com

Units of Measurement

Units of measurement in this publication conform to SI standards and practices.

EU Authorized Representative

Certification Company
Veluwezoom 42
1327 AH ALMERE
The Netherlands
+31 (0)36 202 40 37
info@certification-company.com

Contents

1 Conventions

Before using the instruments described in this document, take note of the following conventions:

WARNING

Indicates a potentially hazardous situation which, if not avoided, could result in **death or serious injury**. Do not proceed unless the required conditions are met and understood.

CAUTION

Indicates a potentially hazardous situation which, if not avoided, may result in **minor or moderate injury**. Do not proceed unless the required conditions are met and understood.

CAUTION

Indicates a potentially hazardous situation which, if not avoided, may result in **component damage**. Do not proceed unless the required conditions are met and understood.

IMPORTANT

Refers to information about this module that you should not overlook.

NOTE

Indicates some information that requires your attention or some extra information for the current topic.

2 Connecting optical fibers

CAUTION

To ensure maximum power and to avoid erroneous readings always inspect fiber end faces. Make sure they are cleaned as detailed below before inserting into any port. **Quantifi Photonics is not responsible for damage or errors caused by bad fiber cleaning or handling**.

IMPORTANT

The type of optical connectors on the Tray PXIe can be found printed on the front plate of the module. **Joining mismatched connectors will damage the ferrules and fibre faces**.

To keep connectors clean and in good condition, Quantifi Photonics strongly recommends inspection with a fiber inspection probe before connecting them. Failure to do so will result in permanent damage to the connectors and degradation of future measurements.

Quantifi Photonics uses high quality connectors in compliance with EIA-455-21A standards.

2.1 Cleaning and connecting optical fibers

To connect the fiber-optic cable to the port:

1. Inspect the fiber using a fiber inspection microscope. If the fiber is clean, proceed to connect it to the desired port.
2. If the fiber is dirty, clean it as detailed below.
3. Gently wipe the fiber end with a lint-free swab dipped in isopropyl alcohol.
4. Use compressed air to dry completely.
5. Visually inspect the fiber end to ensure its cleanliness.
6. Carefully align the connector and port to prevent the fiber end from touching the outside of the port or rubbing against other surfaces. If the connector features a key, ensure that it is correctly mated into the corresponding notch of the port bulkhead.
7. Push the connector in so that the fiber-optic cable is firmly in place, thus ensuring adequate contact. If your connector features a screw sleeve, tighten the connector enough to firmly maintain the fiber in place. **Do not over tighten, as this will damage the fiber and the port bulkhead.**

NOTE

If your fiber-optic cable is not properly aligned and/or connected, you will notice large signal loss and reflection.

3 Introducing the Tray PXIe

Quantifi Photonics' Tray PXIe module stores fragile passive fiber optic components such as splitters, patch cords, WDM couplers, and isolators in one convenient module. The Tray PXIe is available in two configurations – 1 slot with 5 connectors, and 2 slots with 17 connectors.

1 Fastening screws
2 Connectors
3 Module identifier
4 Fastening clip
5 Module information

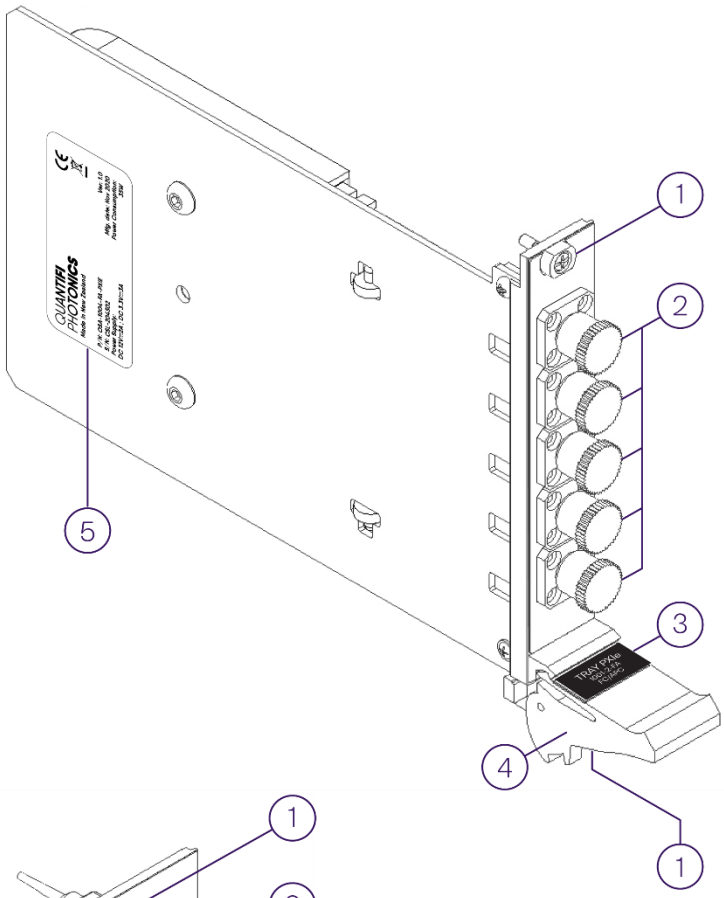

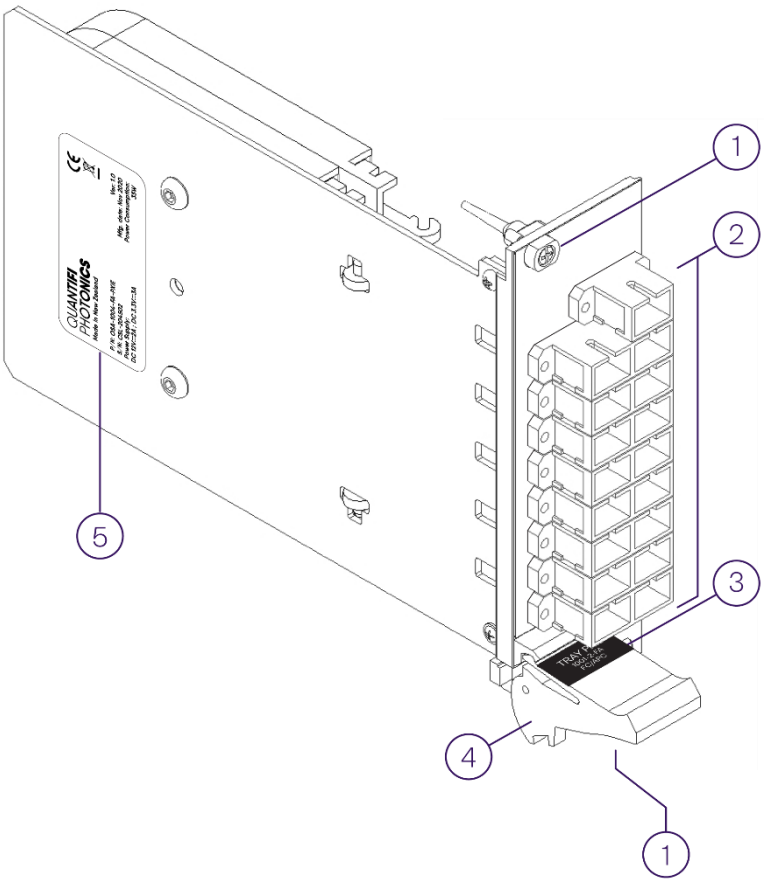

4 Operating the Tray PXIe

The Tray PXIe module has an optical fiber component tray into which the user can install their choice of passive instrumentation.

1. Remove the clear plastic covering from the top of the tray.
2. Coil the fiber against the inside wall of the fiber tray. The plastic tabs ensure that no coiled fiber sits outside the tray.
3. In the center of the tray there are 3 slots into which the passive component metal cylindrical package can be installed.
4. Replace the clear plastic covering onto the top of the tray.

5 Handling the Tray PXIe

CAUTION

- Do not remove the Tray PXIe module from the antistatic packaging until instructed during the following installation procedure.
- **The Tray PXIe is sensitive to ESD. Ensure you are wearing a grounded wrist strap at all times when handling the Tray PXIe to prevent damage from electrostatic discharge.**
- Take care not to handle the optical connectors on the module, as once they are exposed to skin contact this may leave corrosive residue and damage the connector.

5.1 Tray PXIe installation

WARNING

DO NOT attempt to remove or adjust any component of the PXIe chassis while the power is on. **Ensure the chassis is powered OFF, and that the correct handling procedure detailed herein is followed when removing or installing any modules**.

STEP 1: Power OFF the Chassis

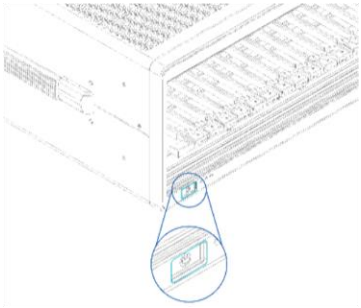

STEP 2: Remove the module from the antistatic bag. Retain bag

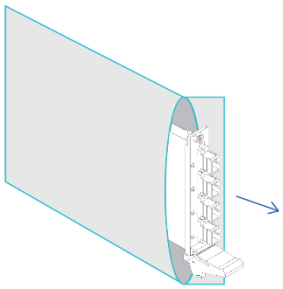

STEP 3: Align module with slot guide rails

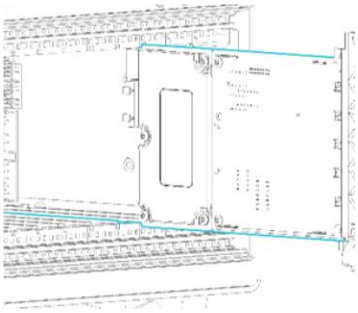

STEP 4: Push module into slot until resistance is felt from the backplane connection

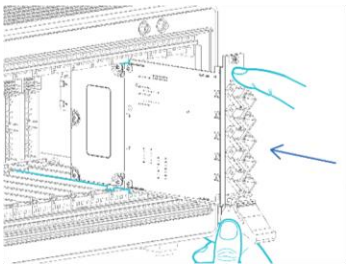

STEP 5: Engage the fastening clip. Secure all fastening screws

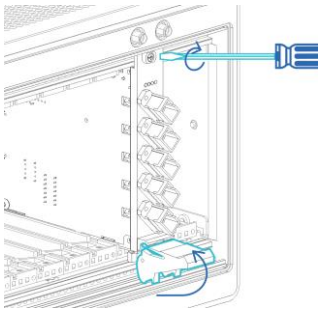

STEP 6: Power ON the chassis

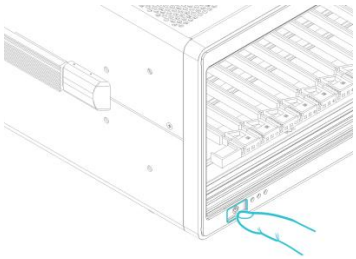

IMPORTANT

After powering on the PXIe chassis, please wait at least **2 minutes** before attempting to communicate with the module. This will allow the chassis enough time to finish boot procedures and initialize the communication server.

5.2 Tray PXIe uninstallation

STEP 1: Power OFF the chassis

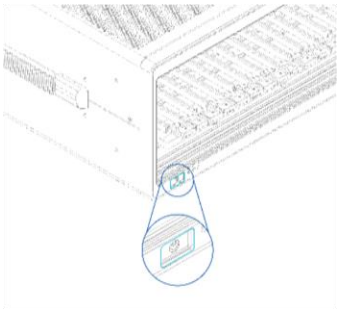

STEP 2: Unsecure the fastening screws and fastening clip

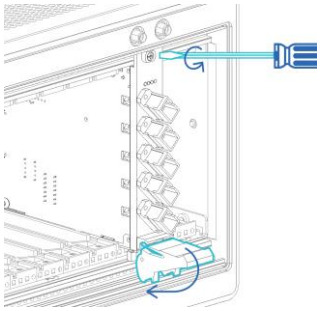

STEP 3: Pull out the module. USE THE FASTENING CLIP TO PULL. DO NOT PULL ON THE CONNECTORS

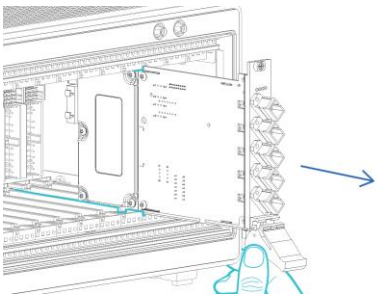

STEP 4: Store module in antistatic bag

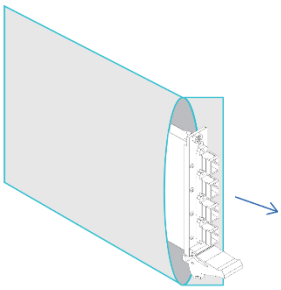

STEP 5: Power ON the chassis

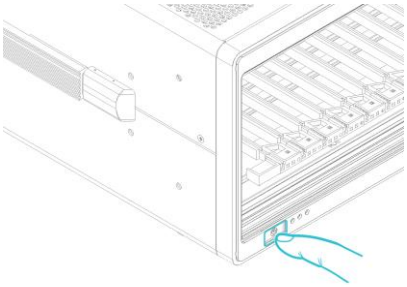

6 Maintenance

To help ensure long, trouble-free operation:

- Always inspect fiber-optic connectors before using them and clean them if necessary.
- Keep the module free of dust.
- Store the module at room temperature in a clean and dry area. Keep the unit out of direct sunlight.
- Avoid high humidity or significant temperature fluctuations.
- Avoid unnecessary shocks and vibrations.
- If any liquids are spilled on or into the module, power off the chassis immediately. Remove the module and allow to dry completely.

WARNING

The use of controls, adjustments, and procedures other than those specified herein may result in exposure to hazardous situations or impair the protection provided by this unit.

7 Technical support

7.1 Contacting the Technical Support Group

To obtain after-sales service or technical support for this module, contact Quantifi Photonics.

The Technical Support Group is available to take your calls Monday to Friday, 9:00 a.m. to 5:00 p.m. (New Zealand Time).

Technical Support Group
Tel.: +64 9 478 4849
support@quantifiphotonics.com

To accelerate the process, please have information such as the name and the serial number (see the product identification label), as well as a description of your problem, close at hand.

7.2 Transportation

Maintain a temperature range within specifications when transporting the unit. **Transportation damage can occur from improper handling.**

The following steps are recommended to minimize the possibility of damage:

- Pack the module in its original packing material when shipping.
- Avoid high humidity or large temperature fluctuations.
- Keep the module out of direct sunlight.
- Avoid unnecessary shocks and vibrations.

8 Warranty

8.1 General information

Quantifi Photonics Ltd. (Quantifi Photonics) warrants from the date of the original shipment (the Warranty Period) that this module will conform to specifications and will be free from defects in material and workmanship for the applicable Warranty Period. Quantifi Photonics also warrants that the equipment will meet applicable specifications under normal use.

⚠ IMPORTANT

The warranty can become null and void if:

- The unit has been tampered with, repaired, or worked upon by unauthorized individuals or non-Quantifi Photonics personnel.
- The warranty sticker has been removed.
- The unit has been opened, other than as explained in this guide.
- The unit serial number has been altered, erased, or removed.
- The unit has been misused, neglected, or damaged by accident.

THIS WARRANTY IS IN LIEU OF ALL OTHER WARRANTIES EXPRESSED, IMPLIED, OR STATUTORY, INCLUDING, BUT NOT LIMITED TO, THE IMPLIED WARRANTIES OF MERCHANTABILITY AND FITNESS FOR A PARTICULAR PURPOSE. IN NO EVENT SHALL QUANTIFI PHOTONICS BE LIABLE FOR SPECIAL, INCIDENTAL, OR CONSEQUENTIAL DAMAGES.

For full warranty terms and conditions, please visit www.quantifiphotonics.com.

8.2 Liability

Quantifi Photonics shall not be liable for damages resulting from the use of the module, nor shall be responsible for any failure in the performance of other items to which the module is connected or the operation of any system of which the module may be a part.

Quantifi Photonics shall not be liable for damages resulting from improper usage, transportation or unauthorized modification of the module, its accompanying accessories and software.

8.3 Exclusions

Quantifi Photonics reserves the right to make changes in the design or construction of any of its products at any time without incurring obligation to make any changes whatsoever on units purchased. Accessories, including but not limited to fuses, pilot lamps, batteries and universal interfaces (EUI) used with Quantifi Photonics products are not covered by this warranty.

This warranty excludes failure resulting from: Improper use or installation, normal wear and tear, accident, abuse, neglect, fire, water, lightning or other acts of nature, causes external to the product or other factors beyond the control of Quantifi Photonics.

8.4 Certification

Quantifi Photonics certifies that this equipment met its published specifications at the time of shipment from the factory.

8.5 Service and repairs

To send any equipment for service, repair or calibration please contact the Technical Support Group.

Test. Measure. Solve.

Quantifi Photonics is transforming the world of photonics test and measurement. Our portfolio of optical and electrical test instruments is rapidly expanding to meet the needs of engineers and scientists around the globe. From enabling ground-breaking experiments to driving highly efficient production testing, you'll find us working with customers to solve complex problems with optimal solutions.

To find out more, get in touch with us today.

General Enquiries sales@quantifiphotonics.com
Technical Support support@quantifiphotonics.com
Phone +64 9 478 4849
North America +1-800-803-8872

quantifiphotonics.com

QUANTIFI PHOTONICS™